Model: BCU52M Part Number: 90067064 Year: 2021

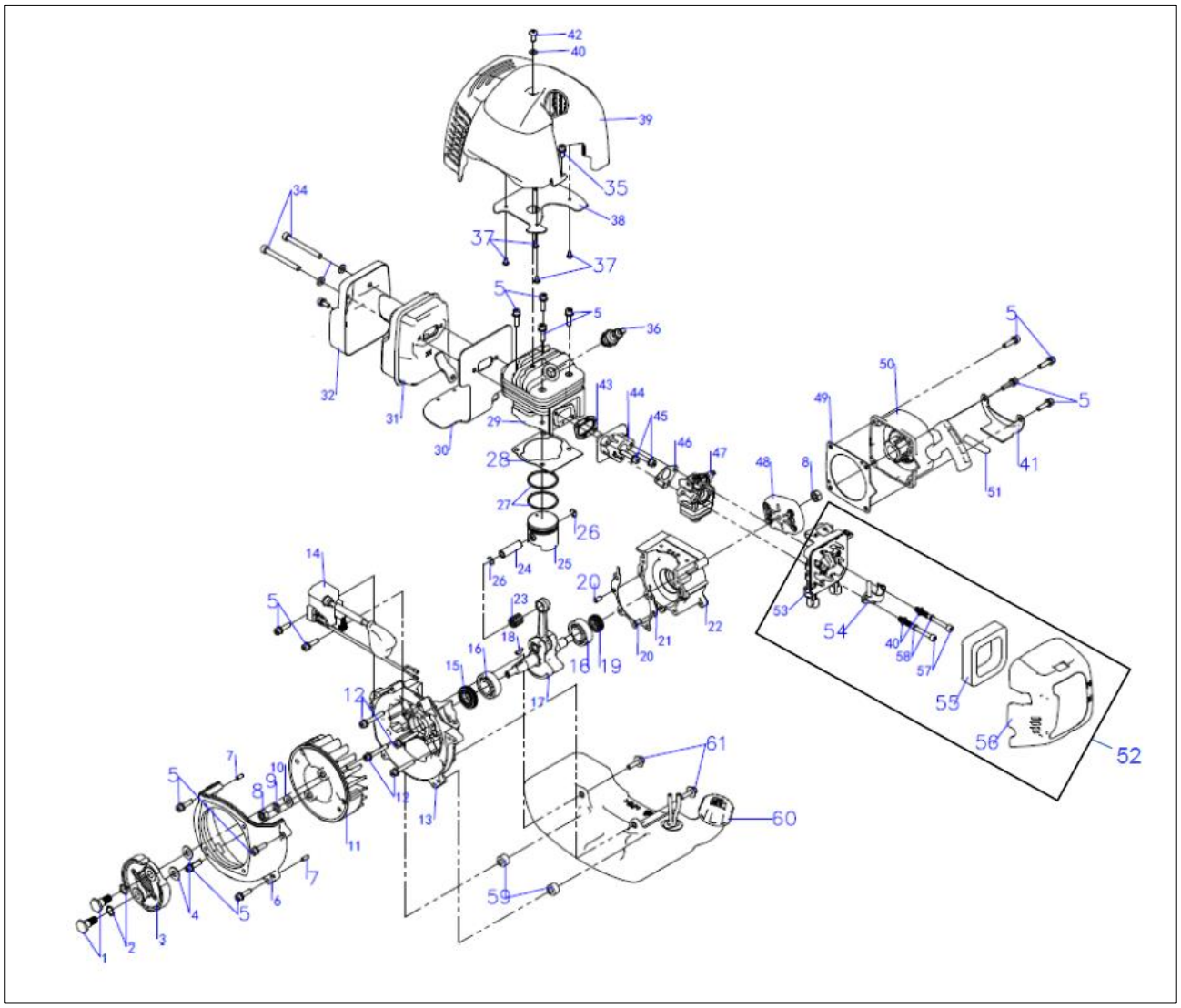

POS	QTY	PARTNUMBER	BESKRIVELSE	DESCRIPTION
1	2	423190	BOLT	BOLT
2	2	423191	BØLGESKIVE 0.3X10.2X14.4	WAVE WASHER 0.3X10.2X14.4
3	1	423192	KOBLING	CLUTCH
4	2	423193	SKIVE	WASHER B
5	14	438253	SKRUE M5X20	M5X20 SCREW
6	1	448354	BLÆSEHUS	FLY WHEEL COVER
7	2	423141	NOT B4X10	KEY B4X10
8	2	423196	MØTRIK M8	NUT M8
9	1	423137	FJEDERSKIVE M8	SPRING WASHER M8
10	1	423138	SKIVE 8	FLAT WASHER 8
11	1	423229	SVINGHJUL	FLYWHEEL
12	4	423140	SKRUE M5X30	SCREW M5X35
13	1	448355	KRUMTAPHUS	FRONT-HALF CRANKSHAFT CASE
14	1	448356	TÆNDSPOLE	IGNITION COIL
15	1	423233	PAKDÅSE 15X30X7	OIL SEAL 15X30X7
16	2	443355	LEJE	BEARING 6202
17	1	448357	KRUMTAP	CRANKSHAFT
18	1	423145	NOT 3X3,8X11	HALF-ROUND KEY 3X5X13
19	1	423143	PAKDÅSE 12X22X7	OIL SEAL 12X22X7
20	2	443363	BØS	PIN 6*10
21	1	423232	PAKNING	CRANKSHAFT GASKET
22	1	448358	KRUMTAPHUS	BACK-HALF CRANKSHAFT CASE
23	1	448359	NÅLELEJE	NEEDLE BEARINGKBK101315.5
24	1	448360	KRYDSPIND	PISTON PIN
25	1	448361	STEMPEL	PISTON
26	2	423240	LÅSERING	PISTON PIN CHECK RING
27	2	448362	STEMPELRINGESÆT	PISTON RING
28	1	423241	PAKNING	CYLINDER GASKET
29	1	448363	CYLINDER	CYLINDER
30	1	448364	ISOLATOR	MUFFLER GASKET ASSY
31	1	448365	UDSTØDNING	MUFFLER ASSY
32	1	448366	UDSTØDNINGSSKÆRM	MUFFLER STEEL COVER
34	2	423246	SKRUE M6X60	SCREW M6X60
36	1	448367	TÆNDRØR	SPARK PLUG
37	4	441457	SKRUE	ST 3.5X6-H-F
38	1	448368	ISOLATOR	ALUMINUM FOIL
39	1	448369	SKÆRM	ENGINE CASE COVER
40	3	438251	SKIVE 5	FLAT WASHER 5
41	1	448370	SKIVE	FUEL TANK HOLDING PLATE
42	1	427145	MASKINSKRUE PH MX8	MACHINE SCREW MX8
43	1	448310	PAKNING	INLET GASKET
44	1	448371	ISOLATOR	INLET PIPE
45	2	445524	SKRUE M5X25	M5X25 SCREW
46	1	423249	PAKNING	CARBURATOR GASKET
47	1	448372	KARBURATOR	CARBURATOR
48	1	423219	STARTTRISSE	STARTER CATCH PLATE
49	1	423220	PAKNING	STARTER GASKET

POS	QTY	PARTNUMBER	BESKRIVELSE	DESCRIPTION
50	1	423221	REKYLSTARTER BCU33/BCU43	EASY-START STARTER
51	1	441468	PAKNING	HOLDING PLATE RUBBER GASKET
52	1	448373	LUFTFILTER KPL	AIR FILTER ASSY
53	1	448374	DÆKSEL	AIR FILTER INNER COVER
54	1	448375	SEPERATOR	ANTI-ANTI-SPRAY SEPARATOR
55	1	448376	LUFTFILTER	AIR FILTER SPONGE
56	1	448377	DÆKSEL	AIR FILTER OUTER COVER
57	2	427128	SKRUE M5X12	SCREW M5X12
58	2	438250	FJEDERSKIVE 5	SPRING WASHER 5
59	2	448378	GUMMIKLODS	FUEL TANK RUBBER GASKET
60	1	448379	BRÆNDSTOFTANK	FUEL TANK ASSY
61	2	427128	SKRUE M5X12	SCREW M5X12

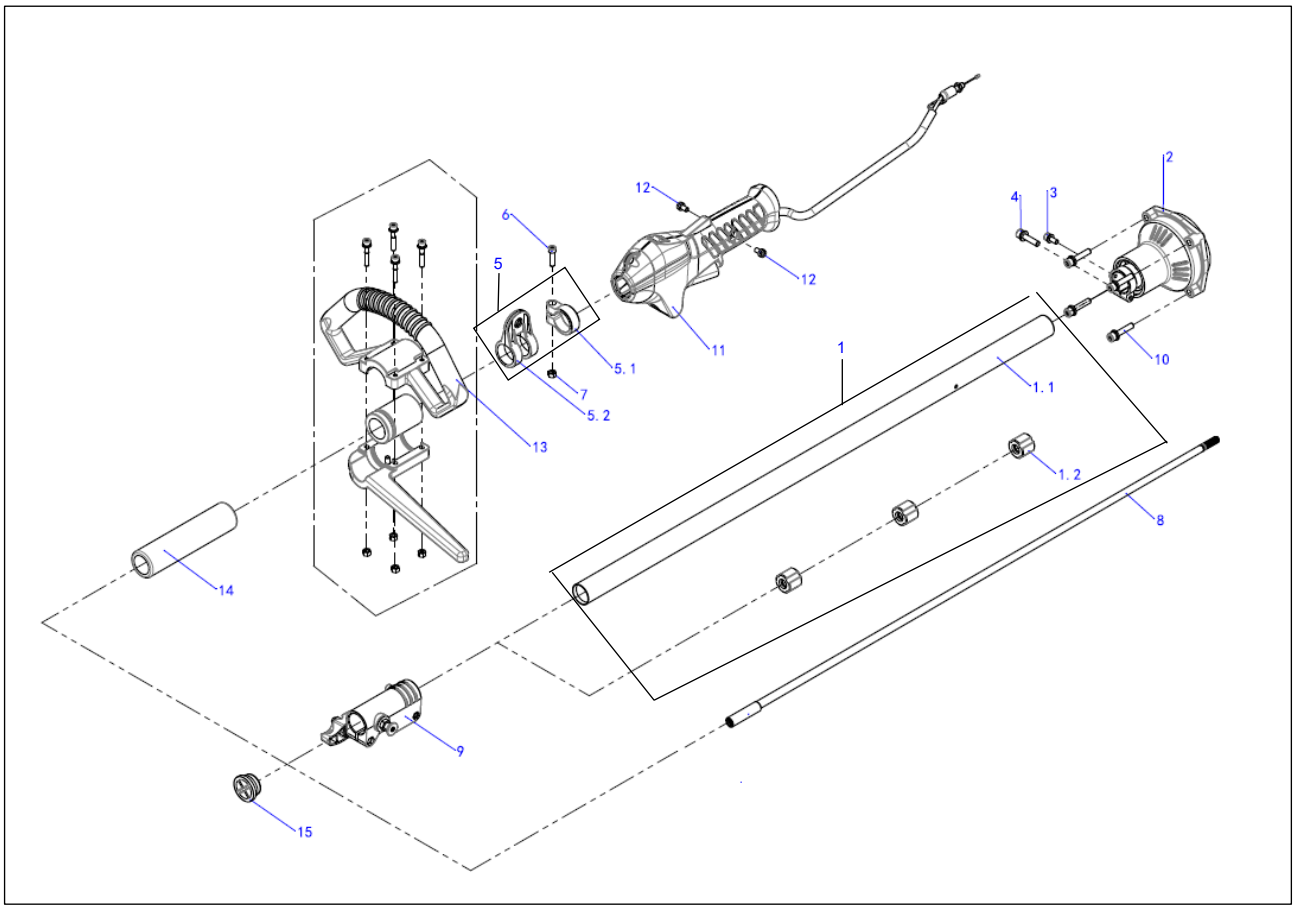

12
6
5
12
4
3
2
11
5. 1
7
5. 2
13
1
1. 1
10
1. 2
8
14
9
15

POS	QTY	PARTNUMBER	BESKRIVELSE	DESCRIPTION
1	1	427102	RØR TIL FASTSPÆNDING AF HÅNDTAG 26X760	ALUMINUM WORKING SHAFT ASSY 26X760
1,1	1	445528	AKSEL RØR	ALUMINUM WORKING SHAFT?26X760F
1,2	3	419002	BØSNING	BUSHING
2	1	448380	KOBLINGSHUS	CONNECTOR ASSY A
3	2	423176	SKRUE M5X12	SCREW M5X12
4	1	423177	SKRUE M6X25	SCREW M6X25
5	1	448381	BÆREKROG KPL.	BELT CONNECTOR ASSY
5,1	1	419519	BÆREKROG	HOOK
5,2	1	419518	KROG	HOOK
6	1	438295	SKRUE M5X30	M5X30 SCREW
7	1	419014	MØTRIK M5	NUT M5
8	1	427103	AKSEL 8X762	SHAFT 8X762
9	1	448382	SAMLESTYKKE	JOINT SHAFT CONNECTOR
10	4	423185	SKRUE M6X30	SCREW M6X30
11	1	427106	GASHÅNDTAG	THROTTLE TRIGGER ASSY
12	2	427107	SKRUE M5X8	SCREW M5X8
13	1	427111	HÅNDTAG KOMPLET	LOOP HANDLE ASSY
14	1	427110	HÅNDTAG SKUMGUMMI	SPONGE COVER A
15	1	445531	ENDESTYKKE	INNER END CAP

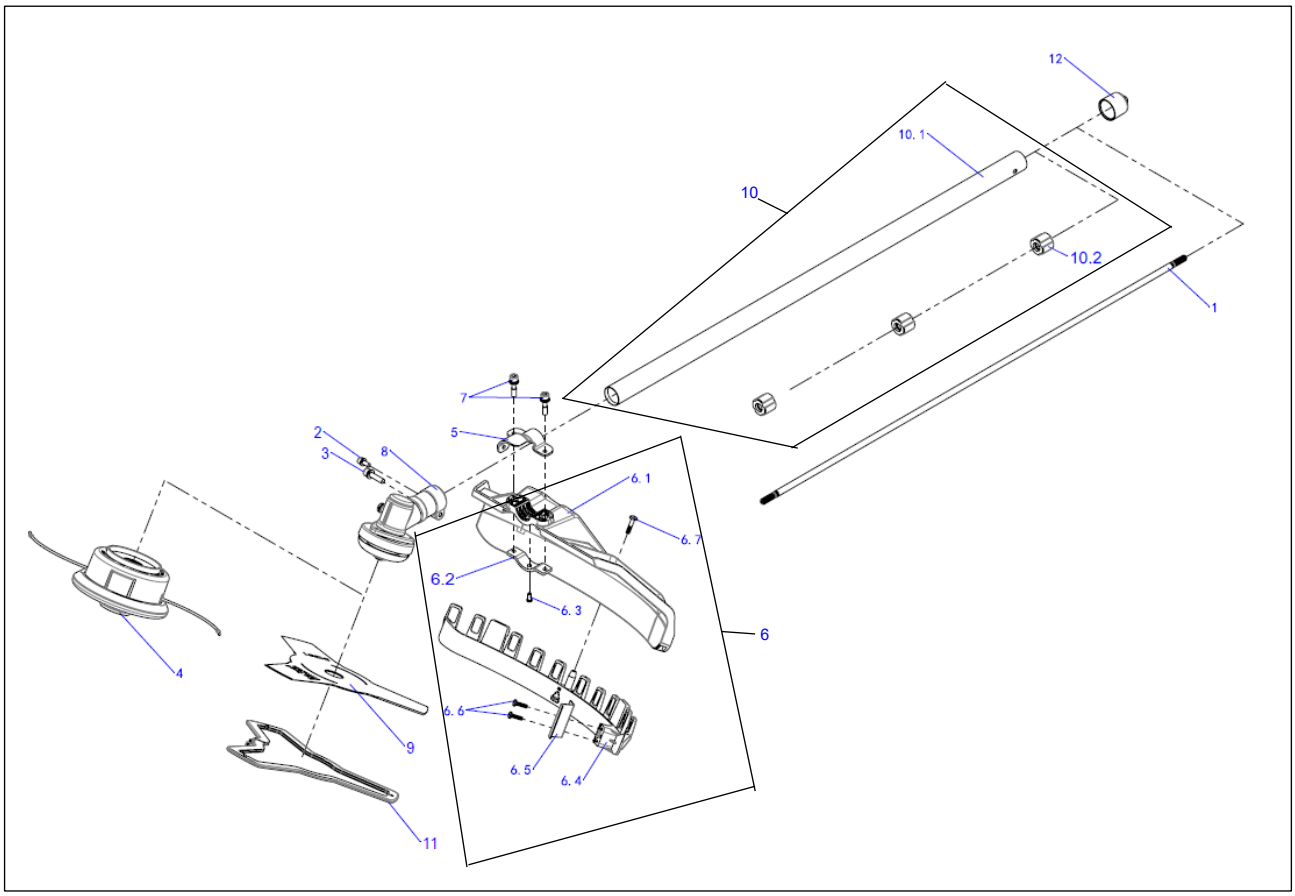
12
10.1
10
10.2
1
7
5
2
3
8
6.1
6.7
6.2
6.3
6
4
9
6.6
6.5
6.4
11

POS	QTY	PARTNUMBER	BESKRIVELSE	DESCRIPTION
1	1	448350	AKSEL 8X755	HARDNESS AXES ?8X755
2	1	423176	SKRUE M5X12	SCREW M5X12
3	1	423177	SKRUE M6X25	SCREW M6X25
4	1	419030	TRIMMERHOVED	TRIMMER HEAD DB
5	1	448319	BESLAG	GUARD COVER CONNECTER PLATE
6	1	448351	BESKYTTELSESSKÆRM KPL.	PROTECTION GUARD ASSY C
6,1	1	448320	SKÆRM	PLASTIC PROTECTION GUARD
6,2	1	448321	BESLAG	LOWER PRESS PLATE
6,3	1	438279	SKRUE ST4.2X10-H-F	ST4.2X10-H-F SCREW
6,4	1	445535	SKÆRM STØTTE	PROTECTION GUARD HOLDER
6,5	1	448322	KNIV	NYLON LINE CUTTING BLADE
6,6	2	445534	SKRUE ST4.2X16-H-F	ST4.2X16-H-F
6,7	1	445539	SKRUE ST4.8X20-H-F	ST4.8X20-H-F
7	2	448318	SKRUE M6X25	M6X25 SCREW
8	1	448323	VINKELGEAR	GEAR BOX M
9	1	427117	3-TANDSKLINGE	BLADE
10	1	448352	RØR 26X735H	ALUMINUM WORKING SHAFT ASSY?26X735I1
10,1	1	448353	AKSEL RØR	ALUMINUM WORKING SHAFT?26X735I1
10,2	3	419002	BØSNING	BUSHING
11	1	445541	BESKYTTELSE 3-TANDSKLINGE	3T BLADE COVER
12	1	445540	GUMMI DÆKSEL	OUTER END CAP

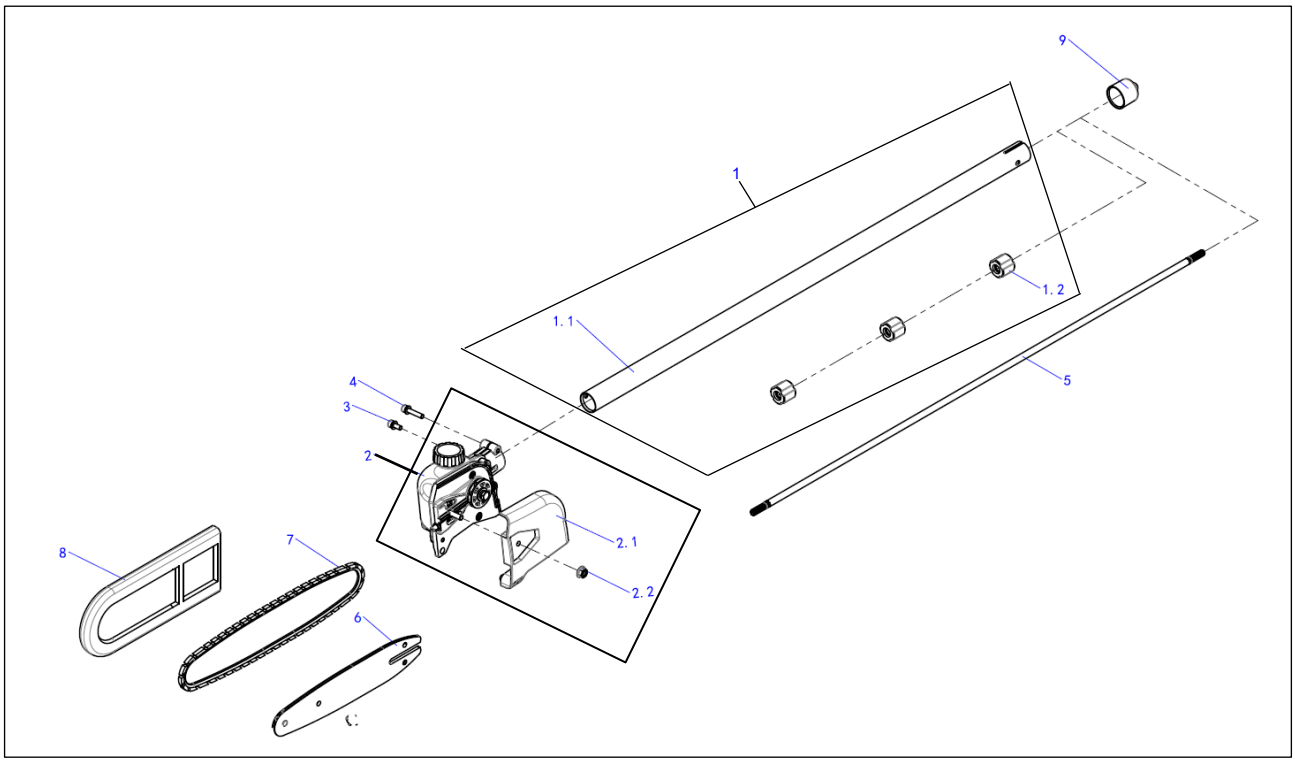
9
1
1. 1
1. 2
5
4
3
2
2. 1
2. 2
8
7
6

POS	QTY	PARTNUMBER	BESKRIVELSE	DESCRIPTION
1	1	427121	RØR KPL 26X735B	ALUMINUM WORKING SHAFT ASSY 26X735
1,1	1	445542	AKSEL RØR	ALUMINUM WORKING SHAFT ?26X760L
1,2	3	419002	BØSNING	BUSHING
2	1	90067062	KÆDESAV BCU33/BCU43 (U. SVÆRD/KÆDE)	SAW CUTTER HEAD (W/O BAR/CHAIN)
2,1	1	90067062	KÆDESAV BCU33/BCU43 (U. SVÆRD/KÆDE)	SAW CUTTER HEAD (W/O BAR/CHAIN)
2,2	1	423196	MØTRIK M8	NUT M8
3	1	423176	SKRUE M5X12	SCREW M5X12
4	1	445524	SKRUE M5X25	M5X25 SCREW
5	1	419462	FLEXAKSEL 762MM	FLEXIBLE AXLE
6	1	427123	MOTORSAVSSVÆRD OREGON 10"	10" BAR OREGON
7	1	427124	MOTORSAVSKÆDE OREGON 91PJ040X	10" CHAIN (OREGON)
8	1	427125	BESKYTTELSE TIL MOTORSAVSSVÆRD 10"	GUARD 10"
9	1	445540	GUMMI DÆKSEL	OUTER END CAP

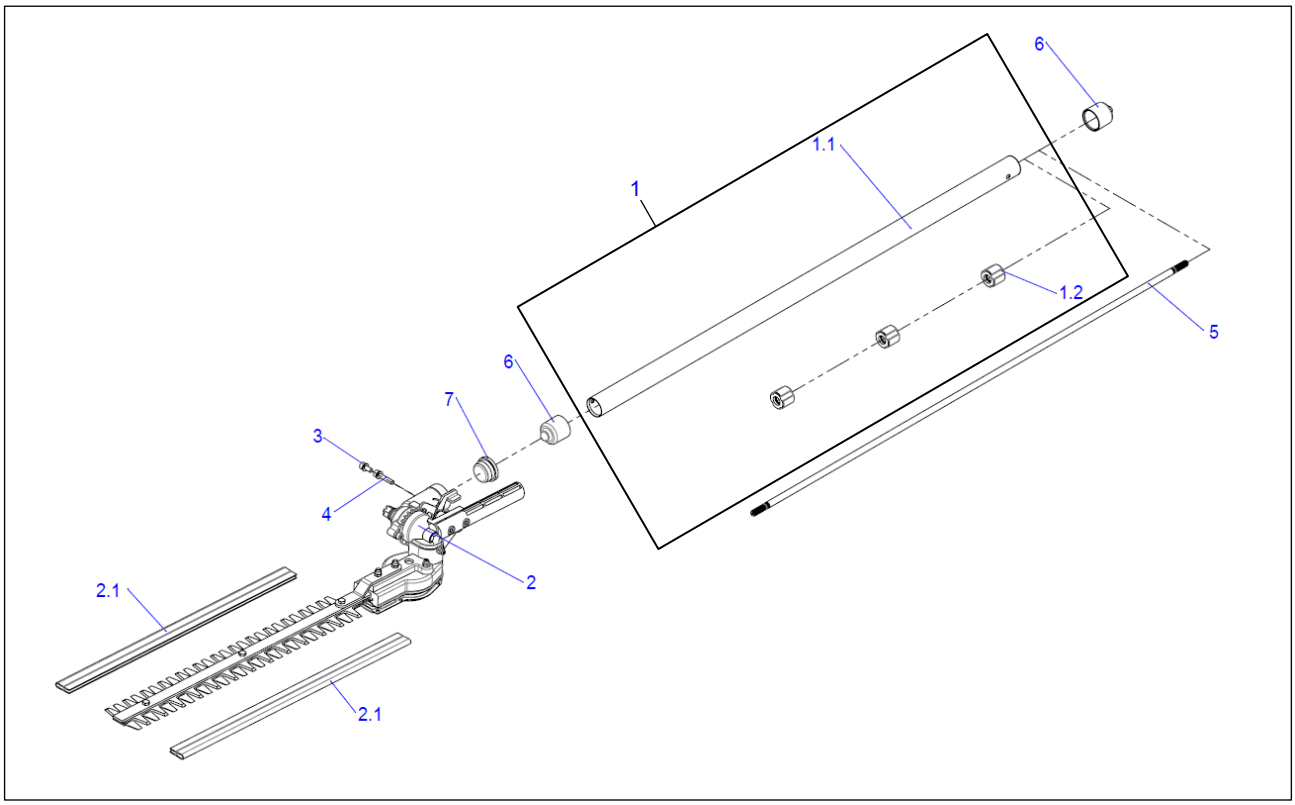
6
1.1
1
1.2
5
6
7
3
4
2
2.1
2.1

POS	QTY	PARTNUMBER	BESKRIVELSE	DESCRIPTION
1	1	427121	RØR KPL 26X735B	ALUMINUM WORKING SHAFT ASSY 26X735
1,1	1	445542	AKSEL RØR	ALUMINUM WORKING SHAFT ?26X760L
1,2	3	419002	BØSNING	BUSHING
2	1	90067061	HÆKKEKLIPPER BCU33M +52M	HEDGE TRIMMER CUTTING HEAD + BLADE ASSY 16"
2,1	2	427126	BESKYTTELSE TIL HÆKKEKLIPPESKÆR	GUARD
3	1	423176	SKRUE M5X12	SCREW M5X12
4	1	445524	SKRUE M5X25	M5X25 SCREW
5	1	419462	FLEXAKSEL 762MM	FLEXIBLE AXLE
6	2	445540	GUMMI DÆKSEL	OUTER END CAP
7	1	445531	ENDESTYKKE	INNER END CAP